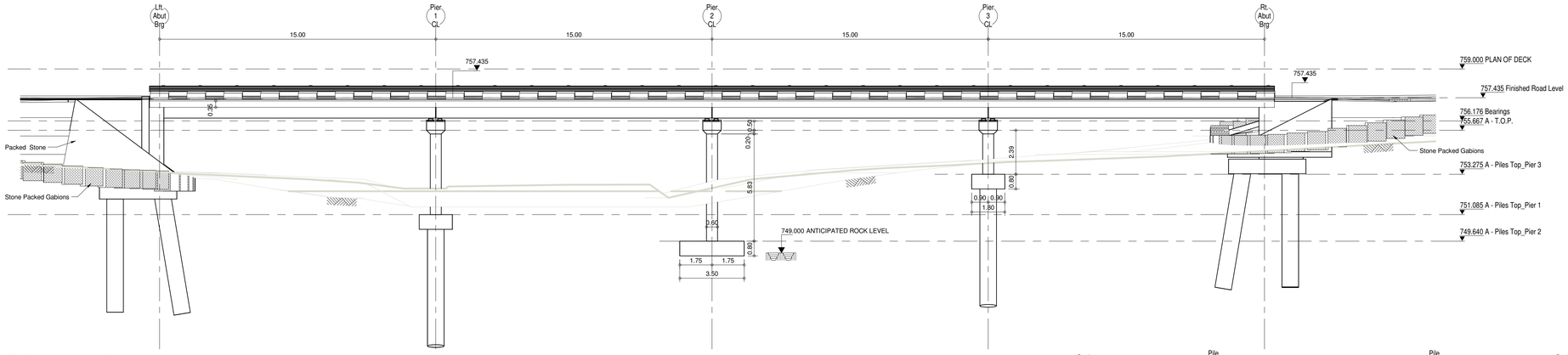

Section 1 - Long-section

SCALE 1 : 100

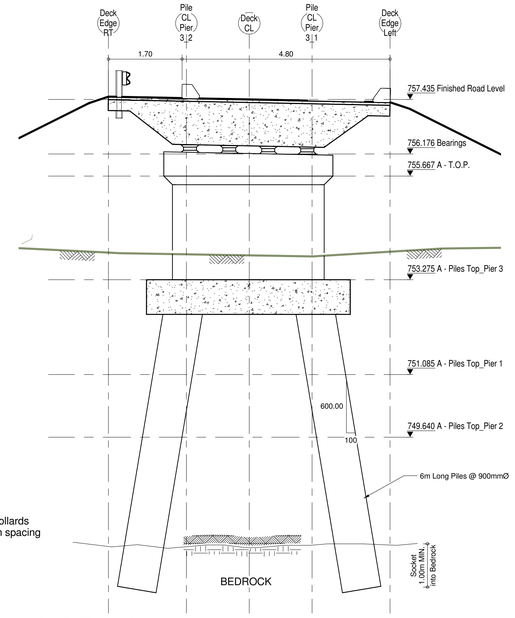

Section 2 - Pier_section

SCALE 1 : 50

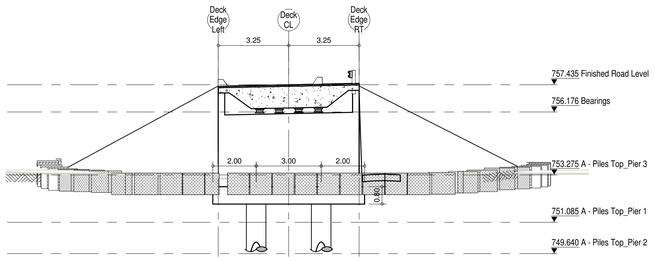

Section 3 - Nouth Abutmnt - Type 2B

SCALE 1 : 100

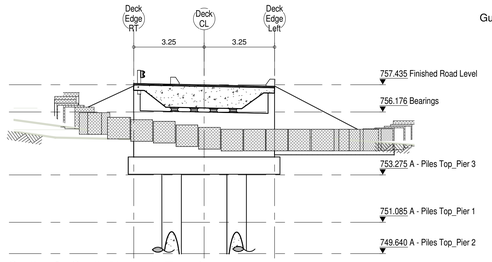

Section 8 - South Abutmnt - Type 1

SCALE 1 : 100

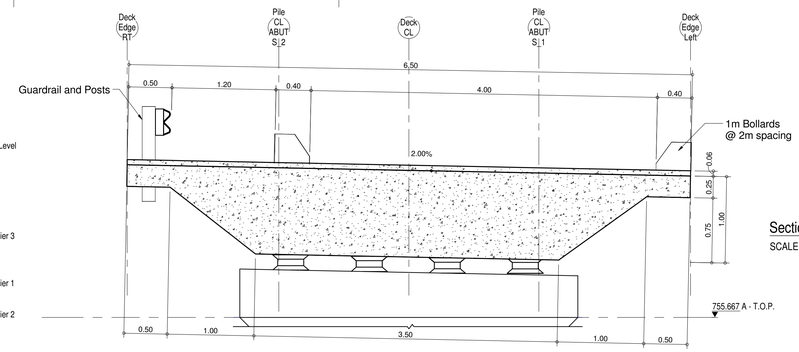

Section - Typical Deck Section

SCALE 1 : 25

PLAN OF DECK

SCALE 1 : 200

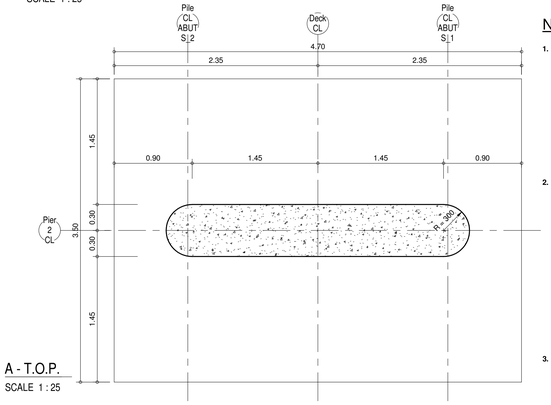

A - T.O.P.

SCALE 1 : 25

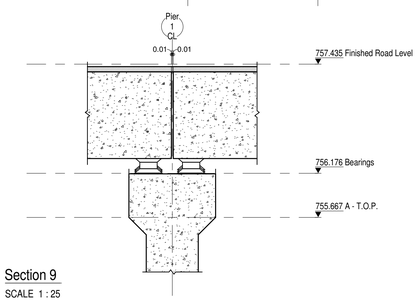

Section 9

SCALE 1 : 25

NOTES

1. **STRUCTURE DESCRIPTION**

1.1 **Deck** : Five 15m simply supported spans comprising cast in situ solid slab.
1.2 **Abutments** : Closed type, reinforced concrete cantilever front and earwings.
1.3 **Pier** : Reinforced concrete walls with tapered cantilevered caps.
1.4 **Foundations** : Abutments and piers (1 and 3) supported by 900mm dia. augered piles socketed 2.5m into rock (Pile working load : 6500kN) ; pier 2 supported by strip footings embedded 250mm into weathered rock (safe bearing pressure : 500kPa)
1.5 **Ancilliary Components** : Bearings : elastomeric pads ; Roadway joints : Neoprene pressfit (at abutments and piers)

2. **HYDROLOGY AND HYDRAULICS**

2.1 **Hydrology** : Catchment size : 230 km²
Longest collector : 41,78 km
Time of concentration: 5,46 h
: Estimated Flood Peak Flows (Standard Design Flood Method)
RMF : 2843 m³ /s
Q2 : 119 m³ /s (Design Flood)
Q5 : 211 m³ /s
Q10 : 274 m³ /s
Q20 : 409 m³ /s
Q50 : 574 m³ /s
Q100 : 820 m³ /s
Q200 : 1154 m³ /s

2.2 **Hydraulics** : This bridge is designed for return period 1:2 years, the design period of 1:10 years results in submergence of structure

3. **DESIGN CODE AND LOADING**

3.1 **Code** : TMH7 Parts 1, 2 and 3 (As amended 1988)
3.2 **Loading** : Live Loads : NA ; NB36 ; NC30
: Dead loads : Reinforced concrete : 25 kN / m³
: Asphalt (min. 100mm) : 21 kN / m³
: Compacted fill : 20 kN / m³
: Earth Pressure: In terms of TMH7 Part 2 cl. 2.4.2
: Type 1 soil assumed

4. **DESIGN METHOD AND PARAMETERS**

4.1 **Design Method** : Limit State Design to TMH7 Parts 1, 2 and 3 (As amended 1988)
: Deck analysis : Finite element program

4.2 **Parameters** : Concrete Young's Modulus : 34 GPa (W50/19)
Steel : 200 GPa
: Temperature : Range ±20 ºC
Coefficient of thermal exp. : 12 x 10-6/
: Prestressing factors (Post tensioning)
Shrinkage : 250 x 10-6/
Creep : 36 x 10-6/ / MPa
Coefficient of friction μ : 0,25 / Radian
Wobble factor k : 25 x 10-4/
Relaxation of steel : 2,5%

5. **MATERIALS AND STRESSES**

5.1 **Concrete** :15/19 : Screed under pile caps and bases
30/19 : Pile caps and foundations
W30/19 : Abutment walls and earwings ; pier walls ; in situ deck cross beams and deck slabs ; approach slabs ; parapets
W40/13 : Precast shutter planks
W40/19 : Precast beams
5.2 **Reinforcing steel :** (f\UTS or equivalent)
MS : 250 MPa
HTS : 450 MPa
5.3 **Prestressing steel :** Min. G.U.T.S. : 1767 MPa
Min. jacking stress : 75% G.U.T.S. (Allowing for 3% mechanical loss in jacks)
After lock-off : 70% G.U.T.S. max.
After all losses : 60% G.U.T.S.
Maximum wedge set not greater than 8mm

6. **CONCRETE COVER AND FINISHES**

6.1 **Minimum concrete cover to reinforcement :**
60mm : Bases and pile caps
50mm : Abutment and pier walls and caps
40mm : Precast beams, cross beams and deck slabs

6.2 All sharp concrete edges to be chamfered 20mm x 20mm U.O.S.
6.3 Formed concrete finishes
Class F1 : Concealed surfaces
Class F2 : Exposed surfaces

6.4 Unformed concrete finishes
Class U1 : Top of pile caps and bases and deck
Class U2 : Top of walls and bridge bearing areas

7. **CONSTRUCTION SAFETY**

7.1 The contractor shall observe all safety requirements of the Construction Regulations of the OHS Act No. 85 of 1993
7.2 Special attention shall be paid to :
- Lateral support of excavations exceeding 1,5m in depth
- Protection around open excavations
- Fall protection from all components during erection and concreting
- Demolition of the existing bridge

Notes - GA

SCALE 1 : 1

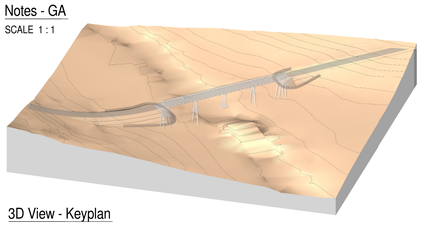

3D View - Keyplan

SCALE

FOR DISCUSSION PURPOSES ONLY

0m 50m 100m

1cm = 10m for A0 size

GENERAL NOTES

DRG. No.	DRAWING TITLE
REFERENCE DRAWINGS	

REV	DESCRIPTION	DATE	REV BY	CHKD
REVISIONS				

DESIGNED
DRAWN
CHECKED
APPROVED
PROJ. PRINCIPAL:
SIGNATURE: DATE:

CLIENT
UMUZIWABANTU MUNICIPALITY
CLIENT: DATE:

DESIGNED BY:
gm turner & associates
quantity surveyors | project managers | construction mentors
Suite 202, 2nd Floor Wheeler House
112-114 Mathews Meyiwa Road
Morningside
Durban
4000
+27 (0)31 309 2958
+27 (0)31 309 2965
+27 (0)83 706 2372
admin@gmta.co.za

PROJECT/DRAWING TITLE

BHUDLU RIVER BRIDGE ROAD ACCESS

GENERAL ARRANGEMENT

SCALE	SHEET
CONTRACT No. UMUZ/XX/2015	PROJECT No. UMUZ/XX/2015
DRAWING No. UMUZ/??/0	REV A

DRAWING SIZE : A0 ROADS PEN.CTB ---- DRAWING3.DWG